8. Exploded Views and Parts List

8-1. Main Assembly . . . . . page(8-2)

8-2. Frame Assembly . . . . . page(8-5)

8-3. MP Assembly . . . . . page(8-9)

8-4. Fuser Unit Assembly . . . . . page(8-11)

8-5. RX Driver Unit Assembly . . . . . page(8-14)

8-6. Cassette Unit Assembly . . . . . page(8-15)

8-7. SCF(Option Cassette Unit) Assembly . . . . . page(8-17)

- Deal drawings and service parts are declared for the items with higher rate of inferiority and replaceable in the level of service description only.
- If inferiority occurs, you can replace the parts by the unit declared in deal drawings and service items.

Way to observe Part Code & Description

Part code and Description is quoted and controlled by determined standard. Refer to this determined standard, it will help with ordering Part.

- **There are two kinds of Part code inscription type.**

●●●●–●●●●●●	ex) 2007-007961	R-CHIP
■■●●–●●●●●■ (It shows part specific)	ex) JB96-01268A	ELA UNIT-COVER TOP

(● : figure, ■ : character (alphabet))

Type 1 : Controlled by Company : It can be commonly used for all kinds of product SEC produce. Mostly, electronics Parts.

Type 2 : Controlled by Division : It is used or one produce. Mostly, Mostly, mechanical Parts.

- **A/S privately used part :** It is only used for A/S .
- **Ass'y part :** Assembled by more than 2 Parts. If necessary part is not A/S Part, Ass'y part including necessary par can be used. It is shown in the diagram and drawing of SVC manual.

- Ass'y part and A/S privately used Part is distinguished by part Code and Description. The are inscription type 2. It is recognized by Part character and front side of description.

DIVISION	PART CODE	DESCRIPTION
A/S Private	**81-****** (JB81-00039A)	AS-***** (AS-USE)
ASS'Y Part	**75-****** (JB75-00068A)	MEC-***** (MEC-CHUTE)
ASS'Y Part	**92-****** (JB92-01131A)	PBA ****** (PBA MAIN-CONTROLLER)
ASS'Y Part	**97-****** (JB97-01089A)	MEA ****** (MEA UNIT-PULLEY IDLE)

IT-Spares.eu

8.1 Main Assembly

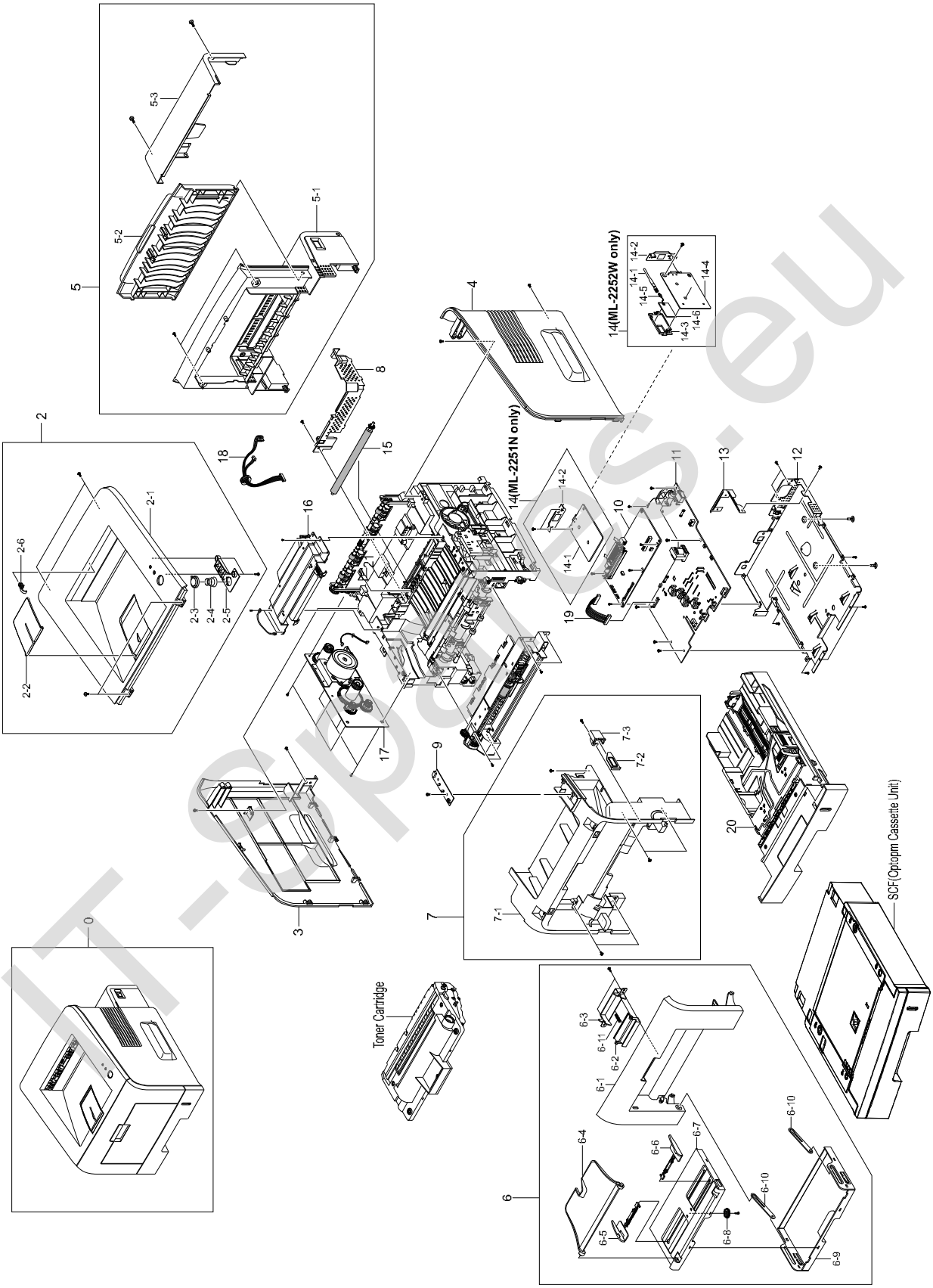

IT-spares.eu

Main Assembly Parts List

SA : Service Available
O : Service available X : Service not available

No.	Description	SEC.Code	Q'ty	SA	Remark
0	SET	ML-2250			
		ML-2251N			
		ML-2252W			
1	ELA HOU-FRAME-220V, HB2	JC96-03129A	1	X	
1	ELA HOU-FRAME-110V, HB2	JC96-03129B	1	X	
2	MEA UNIT-COVER TOP	JC97-01953A	1	O	
2-1	COVER-M-TOP	JC63-00437A	1	O	
2-2	PMO-STACKER RX	JC72-01325B	1	X	
2-3	KEY-M-ON LINE	JC64-00039A	1	X	
2-4	SPRING-CS	6107-001169	1	X	
2-5	LENS LED-M-LED	JC67-00026A	1	X	
2-6	BUSH-M-F/DOWN	JC61-00902A	1	X	
3	COVER-M-SIDE L	JC63-00432A	1	O	
4	COVER-M-SIDE R	JC63-00430A	1	O	
5	MEA UNIT-COVER REAR	JC97-01954A	1	O	
5-1	COVER-M-REAR	JC63-00438A	1	X	
5-2	COVER-FACE UP	JC63-00439A	1	X	
5-3	COVER-M-REAR OPEN	JC63-00431A	1	X	
6	MEA UNIT-COVER FRONT	JC97-01950A	1	O	
6-1	COVER-M-FRONT	JC63-00433A	1	X	
6-2	KNOB-M-LOCKER	JC64-00148A	1	X	
6-3	HOLDER-M-LOCKER	JC61-00936A	1	X	
6-4	TRAY-EXIT-MP	JC63-00447A	1	X	
6-5	ADJUST-M-MP L	JC70-00478A	1	X	
6-6	ADJUST-M-MP R	JC70-00479A	1	X	
6-7	TRAY-M-COVER-MP	JC63-00446A	1	X	
6-8	GEAR-PINION	JG66-40003A	1	X	
6-9	TRAY-M-CASE-MP	JC63-00445A	1	X	
6-10	TRAY-M-LINK-MP	JC63-00444A	2	X	
6-11	SPRING-CIS(C2)	JG61-70549A	1	X	
7	MEA UNIT-COVER MID	JC97-01952A	1	O	
7-1	COVER-M-MIDDLE	JC63-00436A	1	X	
7-2	PMO-M-SUB ACTUATOR	JC72-01339A	1	X	
7-3	CAP-M-SUB ACTUATOR	JC67-00068A	1	X	
8	COVER-M-SMPS REAR	JC63-00434A	1	O	
9	PBA MAIN-PANEL	JC92-01439A	1	O	
10	PBA MAIN-CONTROLLER	JC92-01595A	1	O	
11	SMPS-V2_220V	JC44-00069A	1	O	⚠ 220V
	SMPS-V1_110V	JC44-00070A	1	O	⚠ 110V

IT-Spares.eu

Main Assembly Parts List

SA : Service Available
O : Service available X : Service not available

No.	Description	SEC.Code	Q'ty	SA	Remark
12	MEA UNIT-SHIELD	JC97-01966A	1	O	
13	BRACKET-P-INLET	JC61-00601A	1	O	
14	ELA HOU-NPC3_PRT	JC96-02699D	1	X	ML-2251N Only
14-1	BRACKET-NPC	JC61-00809A	1	X	
14-2	PBA SUB-NPC3_PRT	JC92-01466A	1	X	
14	ELA HOU-WLAN NPC	JC96-03074A	1	X	ML-2252W Only
14-1	ANTENNA-WLAN	JC42-00001A	1	X	
14-2	BRACKET-P_NETWORK WIRELESS	JC61-00809B	1	X	
14-3	COVER-M-NON WIRE NET	JC63-00126A	1	X	
14-4	PBA SUB-NPC3_PRT WLAN	JC92-01498A	1	X	
14-5	CBF COAXIAL CABLE-WLAN	JC39-00231A	1	X	
14-6	ELA MODUL-WLAN FOR_EU	JC96-02701A	1	X	
15	MEA ETC-TR	JC97-01917A	1	O	
16	UNIT-LSU HUMMINGBIRD2	JC59-00018B	1	O	
17	ELA UNIT-RX-DRIVE	JC96-03078A	1	O	
18	CBF HARNESS-LSU	JC39-00242A	1	O	
19	CBF HARNESS-ENG INE	JC39-00240A	1	O	
20	MEA UNIT-CASSETTE HB2	JC97-01955A	1	O	
21	PLATE CHANNEL	JC61-00606A	1	X	

IT-Spares.eu

8.2 Frame Unit Assembly

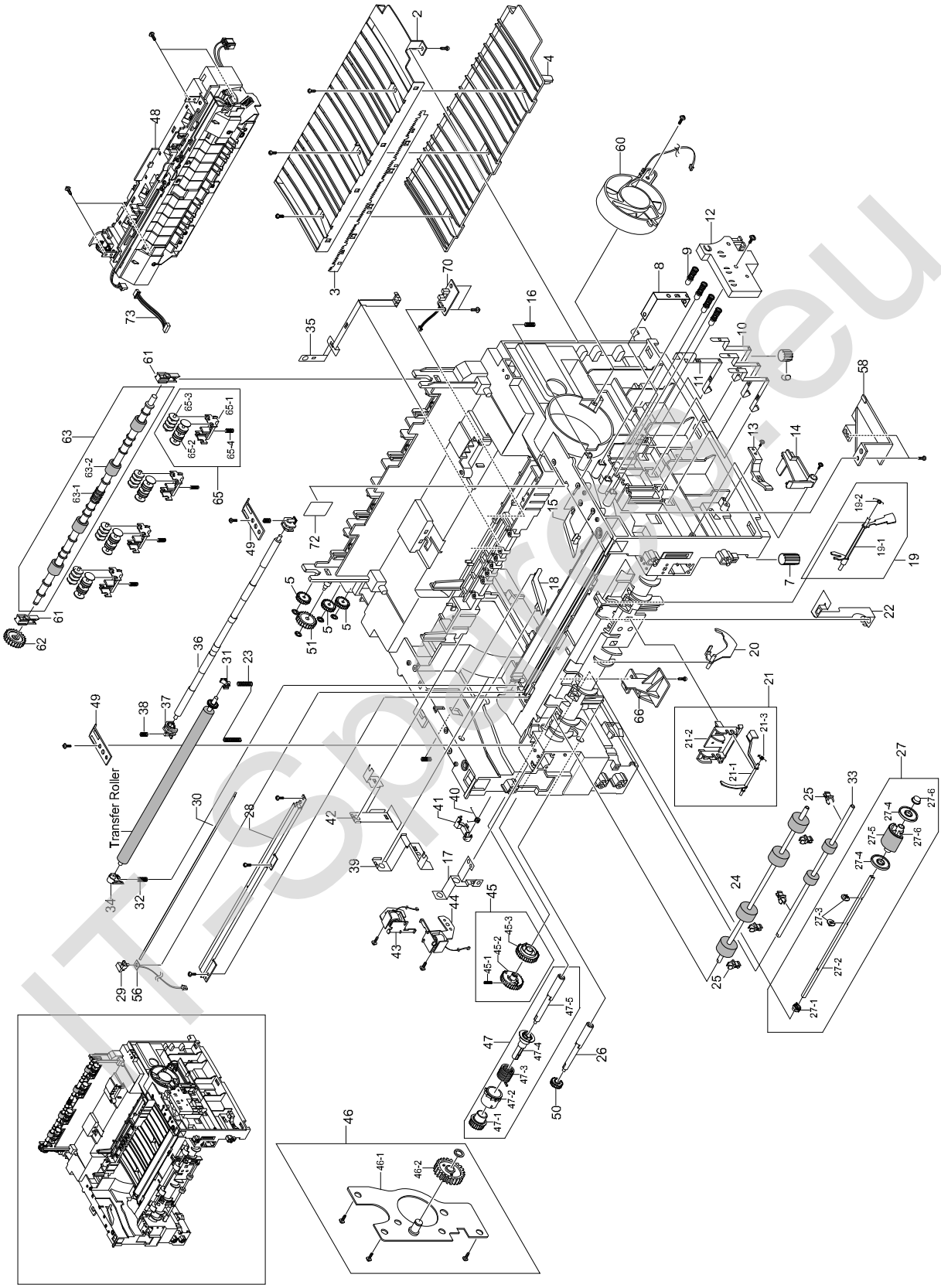

ITsparts.eu

Frame Unit Assembly Parts List

SA : Service Available
O : Service available X : Service not available

No.	Description	SEC.Code	Q'ty	SA	Remark
0	ELA UNIT-FRAME 110V	JC96-03129B	1	X	⚠ 110V
	ELA UNIT-FRAME 220V	JC96-03129A	1	X	⚠ 220V
1	FRAME-BASE R2	JC61-00906A	1	X	
2	GUIDE-P-TR	JC61-00607A	1	X	
3	PLATE-P-SAW	JC61-00604B	1	X	
4	GUIDE-M-TR RIB	JC61-00594A	1	X	
5	PMO-GEAR_EXIT_DRV16	JC72-00143A	3	X	
6	FOOT-BACK	JC61-00835A	2	X	
7	FOOT-FRONT	JC61-00836A	2	O	
8	GROUND-GUDIE TR R2	JC63-00397A	1	X	
9	MEC-TERMINAL	JC75-00049A	4	O	
10	PLATE-TERMINAL CON R2	JC61-00903A	3	X	
11	PLATE-TERMINAL CR R2	JC61-00904A	1	X	
12	HOUSING-TERMINAL R2	JC61-00911A	1	X	
13	PMO-LOCKER CST	JC72-00983A	2	X	
14	PMO-ACTUATOR CVR OPEN	JC72-00974A	1	X	
15	PMO-PLATE GUIDE DEVE_R	JC72-00985A	1	X	
16	SPRING ETC-GUIDE DEVE	JC61-70932A	2	X	
17	GROUND-PUSH BUSHING	JC63-00401A	1	X	
18	PMO-PLATE GUIDE DEVE_L	JC72-00984A	1	X	
19	MEA UNIT-ACT FEED	JC97-01927A	1	X	
19-1	PMO-ACT FEED R2	JC72-01323A	1	X	
19-2	SPRING-TS	6107-001164	1	X	
20	PMO-ACTUATOR EMPTY	JC72-00975A	1	O	
21	MEA UNIT-ACT MANUAL	JC97-01928A	1	X	
21-1	PMO-ACT MANUAL R2	JC72-01324A	1	O	
21-2	HOLDER-ACT MANUAL R2	6107-001165	1	X	
21-3	SPRING-TS	6107-001165	1	X	
22	GROUND-EARTH TR R2	JC63-00395A	1	X	
23	GROUND-TERMINAL TR	JC63-00403A	1	X	
24	ROLLER-FEED ROLLER 1	JC66-00526A	1	O	
25	PMO-BUSHING FEED	JC72-00382B	5	O	
26	SHAFT-FEED	JC66-00398A	1	O	
27	MEA UNIT-PICKUP	JC97-01926A	1	O	
27-1	BUSH-M-PICK_UP L	JC61-00586A	1	X	
27-2	SHAFT-P-PICK_UP	JC66-00399A	1	X	
27-3	STOPPER-PICK UP_R2	JC61-00915A	2	X	
27-4	PMO-IDLE PICK_UP	JC72-00982A	2	X	

ITSparts.eu

Frame Unit Assembly Parts List

SA : Service Available
O : Service available X : Service not available

No.	Description	SEC.Code	Q'ty	SA	Remark
27-5	SPONGE-ROLLER PICK_UP	JC72-01231A	1	X	
27-6	BUSH-M-PICK_UP R	JC61-00587A	1	X	
27-7	HOUSING-PICK UP_R2	JC61-00909A	1	X	
27-8	HOUSING-PICK UP2_R2	JC61-00910A	1	X	
27-9	SHAFT-CORE	JC65-00720A	2	X	
28	IPR-P-EARTH TRANSFER	JC70-00307A	1	O	
29	HOLDER-PTL R2	JC61-00907A	1	O	
30	LENS-PTL	JC67-00027A	1	O	
31	PMO-BUSHING_TR(L)	JC72-00102A	1	X	
32	SPRING ETC-TR L HAWK	JC61-00047A	1	X	
33	ROLLER-FEED	JC66-00598A	1	O	
34	BUSH-M-TR L	JC61-00588A	1	X	
35	GROUND-FUSER R2	JC63-00396A	1	X	
36	SHAFT-FEED IDLE	JC66-00527A	1	X	
37	BUSH-M-FEED IDLE	JC61-00585A	2	X	
38	SPRING ETC-TR	JC61-70958A	2	X	
39	GROUND-DRIVE2 R2	JC63-00398A	1	X	
40	SPRING-TS	6107-001170	1	X	
41	CAM-M-PICK_UP	JC66-00377A	1	X	
42	GROUND-DRIVE R2	JC63-00394A	1	X	
43	SOLENOID-FEED ROCKY2	JC33-00014A	1	O	
44	SOLENOID-HB (MANUAL)	JC33-00010A	1	O	
45	MEA UNIT-GEAR PICKUP	JC97-01929A	1	O	
45-1	GEAR-PICK UP B_R2	JC66-00705A	1	X	
45-2	GEAR-PICK UP A_R2	JC66-00704A	1	X	
45-3	SPRING-CS	6107-001167	1	X	
46	MEA UNIT-BRACKET FEED	JC97-01925A	1	O	
46-1	BRACKET-FEED R2	JC61-00913A	1	O	
46-2	GEAR-Z35 IDLE	JC66-00690A	1	X	
47	MEA UNIT-CLUTCH	JC97-01788A	1	O	
47-1	GEAR-FEED 1	JC66-00393A	1	X	
47-2	PMO-COLLAR_SPRING	JC72-00978A	1	X	
47-3	SPRING-TS	6107-001171	1	X	
47-4	PMO-HUB CLUTCH	JC72-00981A	1	X	
47-5	SHAFT-FEED	JC66-00398A	1	X	
48	ELA HOU-FUSER 110V	JC96-03105A	1	O	⚠ 110V
	ELA HOU-FUSER 220V	JC96-03106A	1	O	⚠ 220V
49	PLATE-PUSH BUSHING	JC61-00914A	2	X	

ITSpares.eu

Frame Unit Assembly Parts List

SA : Service Available
O : Service available X : Service not available

No.	Description	SEC.Code	Q'ty	SA	Remark
50	GEAR-FEED 2	JC66-00394A	1	X	
51	GEAR-IDLE 23	JC66-00396A	1	X	
52	SPRING-TS	6107-001164	1	X	
54	IPR-P-TERMINAL DEVE KEY	JC70-00340A	3	X	
56	PBA SUB-PTL	JC92-01621A	1	O	
58	HOLDER-TERMINAL R2	JC61-00908A	1	X	
61	MEC-BEARING,EXIT	JC61-00829A	2	X	
62	GEAR-EXIT F/DOWN	JC66-00038A	1	X	
63	ROLLER-EXIT F/DOWN	JC66-00378A	1	X	
64	RMO-RUBBER EXIT	JC73-40915A	4	X	
65	MEA RACK-EXIT ROLLER	JC97-01034A	4	O	
65-1	PMO-HOLDER EXIT ROLL	JC72-41006A	1	X	
65-2	PMO-ROLLER FD F	JC72-41007A	1	X	
65-3	PMO-ROLLER FD R	JC72-41008A	1	X	
65-4	SPRING ETC-EXIT ROLL FD	JC61-70911A	1	X	
66	GUIDE-SUB FRONT	JC61-00917A	1	X	
70	PBA SUB-EXIT SENSOR	JC92-01604A	1	O	
72	LABEL(R)-HOT CAUTION,KME	JC68-00317A	1	X	
73	FAN-DC	JC31-00025A	1	O	

IT-Spares.eu

8.3 MP Assembly

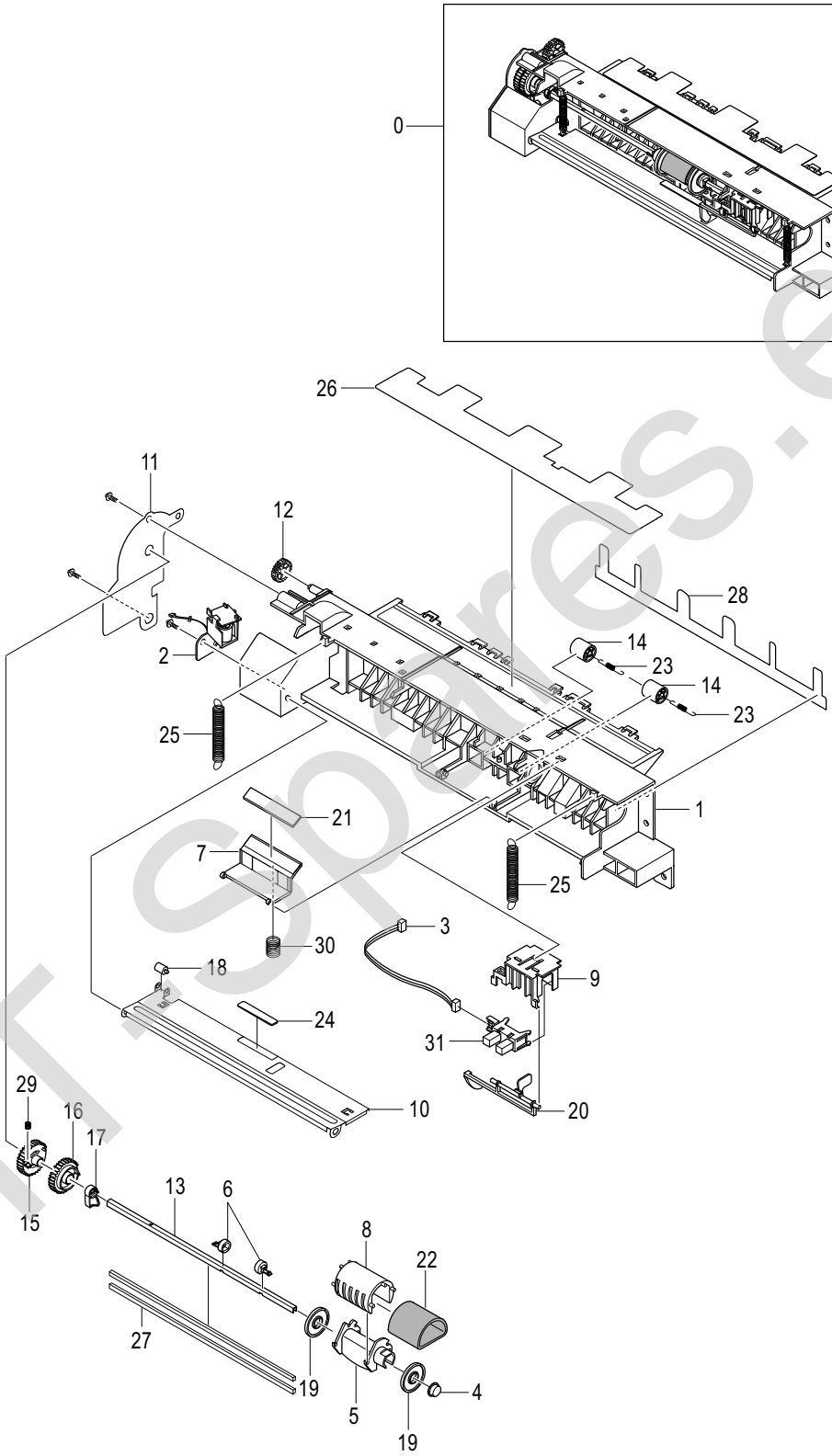

IT Spares.eu

MP Assembly Parts List

SA : Service Available
O : Service available X : Service not available

No.	Description	SEC.Code	Q'ty	SA	Remark
0	ELA UNIT-MP	JC96-03132A	1	O	
1	FRAME-17-MP	JC61-00923A	1	X	
2	SOLENOID-MP	JC33-00015A	1	O	
3	CBF HARNESS-MPF SEN	JC39-00365A	1	X	
4	BUSH-M-PICK-UP R	JC61-00587A	1	X	
5	HOUSING-M-PICK UP2_R2	JC61-00910A	1	X	
6	STOPPER-M-PICK UP_R2	JC61-00915A	2	X	
7	HOLDER-M-PAD_MP	JC61-00924A	1	O	
8	HOUSING-M-PICK UP_MP	JC61-00925A	1	X	
9	HOLDER-M-SENSOR_MP	JC61-00926A	1	X	
10	PLATE-P-KNOCK UP_MP	JC61-00927A	1	X	
11	BRACKET-P-PICK UP_MP	JC61-00932A	1	X	
12	GEAR-IDLE 23	JC66-00396A	1	X	
13	SHAFT-P-PICK_UP	JC66-00399A	1	X	
14	ROLLER-M-IDLE FEED	JC66-00529A	2	X	
15	GEAR-M-PICK UP_MP	JC66-00710A	1	X	
16	GEAR-M-HOLDER_MP	JC66-00709A	1	X	
17	CAM-M-PICK UP_MP	JC66-00711A	1	X	
18	PMO-ROLLER CAM_MP	JC72-00761A	1	X	
19	PMO-IDLE PICK UP	JC72-00982A	2	X	
20	PMO-M-ACT EMPTY MP	JC72-01338A	1	X	
21	RPR-FRICTION PAD	JC73-00140A	1	O	
22	RUBBER-PICK UP_MP	JC73-00194A	1	O	
23	SPRING-ETC-EXIT ROLL FD	JC61-70911A	2	X	
24	RPR-PAD CASSETTE	JC73-00141A	1	X	
25	SPRING-ES	6107-001237	2	X	
26	SHEET GUIDE PAPER R2	JC63-00470A	1	X	
27	SHAFT-P-CORE	JC66-00720A	2	X	
28	SHEET GUIDE MP	JC63-00448A	1	X	
29	SPRING-CS	6107-001167	1	X	
30	SPRING-ES	6107-001047	1	X	
31	PHOTO INTERRUPTER	0604-001095	1	X	

ITspares.eu

8.4 Fuser Unit Assembly

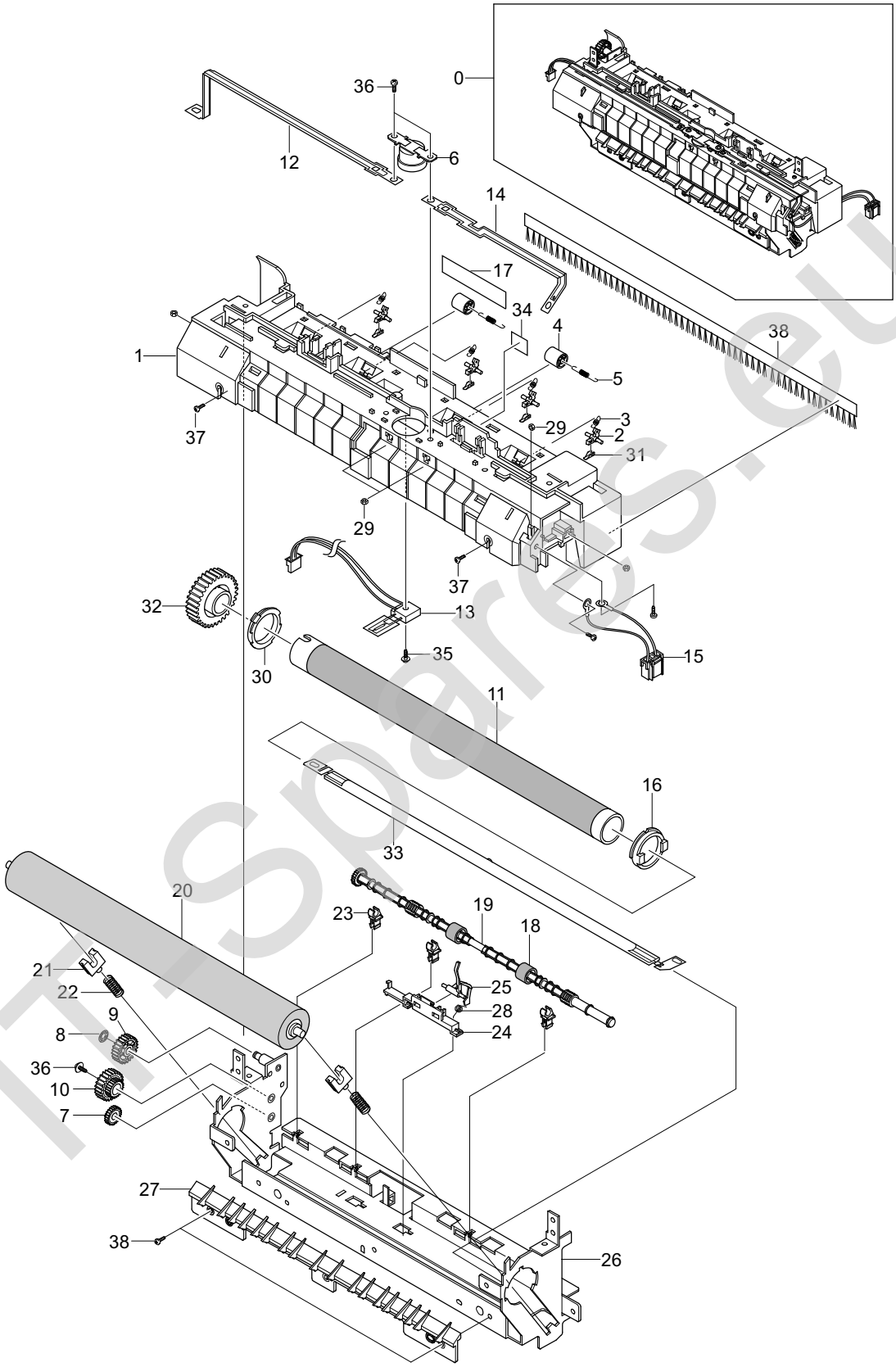

ITSpares.eu

Fuser Unit Assembly Parts List

SA : Service Available
O : Service available X : Service not available

No.	Description	SEC.Code	Q'ty	SA	Remark
0	ELA HOU-FUSER 110V	JC96-03105A	1	O	⚠ 110V
	ELA HOU-FUSER 220V	JC96-03106A	1	O	⚠ 220V
1	COVER-FUSER R2	JC63-00363A	1	X	
2	HOLDER-PLATE CLAW R2	JC61-00886A	4	X	
3	SPRING ETC-CLAW	JC61-00064A	4	X	
4	PMO-ROLLER_EXIT	JC72-40361A	2	X	
5	SPRING ETC-FUSER EXIT	JC61-70976A	2	X	
6	THERMOSTAT-150	JC47-00005A	1	O	
7	PMO-GEAR_EXIT_DRV16	JC72-00143A	1	X	
8	GEAR-IDLE 23	JC66-00396A	1	X	
9	RING-E	6044-000125	1	X	
10	GEAR-RDCN 25/15	JC66-00397A	1	X	
11	ROLLER-HEATER	JC66-00729A	1	O	
12	ELECTRODE-LFET R2	JC70-00473A	1	X	
13	THERMISTOR-NTC	1404-001298	1	O	
14	ELECTRODE-RIGHT R2	JC70-00472A	1	X	
15	CBF HARNESS-FUSER 110V	JC39-00353A	1	X	WHITE
	CBF HARNESS-FUSER 220V	JC39-00354A	1	X	BLACK
16	BUSH-HR R_R2	JC61-00887A	1	X	
17	LABEL(P)-CAUTION, HOT_FUSER	JC68-30928D	1	X	
18	RMO-RUBBER_EXIT	JC73-00017A	2	X	
19	ROLLER-M-EXIT F/UP	JC66-00380A	1	X	
20	ROLLER-PRESSURE	JC66-00600B	1	O	
21	BEARING-PRESSURE/R	JC66-10901A	2	X	
22	SPRING-CS	6107-001168	2	X	
23	PMO-BUSHING TX	JC72-00382A	3	X	
24	HOLDER-ACTUATOR	JC61-00581A	1	X	
25	PMO-ACTUATOR EXIT R2	JC72-01319A	1	X	
26	FRAME-FUSER R2	JC61-00890A	1	X	
27	GUIDE-INPUT R2	JC61-00889A	1	X	
28	SPRING-TS	6107-001165	1	X	
29	NUT-HEXAGON	6021-000222	5	X	
30	BUSH-HR L_R2	JC61-00888A	1	X	
31	PLATE-P-CLAW	JC61-00605A	4	X	
32	GEAR-FUSER R2	JC66-00695A	1	X	
33	LAMP-HALOGEN 110V	4713-001182	1	O	⚠ 110V
	LAMP-HALOGEN 220V	4713-001183	1	O	⚠ 220V

ITSpares.eu

Fuser Unit Assembly Parts List

SA : Service Available
O : Service available X : Service not available

No.	Description	SEC.Code	Q'ty	SA	Remark
34	LABEL(R)-HV FUSER	JC68-00407A	1	X	
35	SCREW-TAPTIEE	6003-000196	1	X	
36	SCREW-ASS'Y MACH	6006-001193	6	X	
37	SCREW-TAPTIEE	6003-000269	6	X	
38	BRUSH-ANTISTAIC	JC75-00095A	1	X	

IT-Spares.eu

8.5 RX Driver Unit Assembly

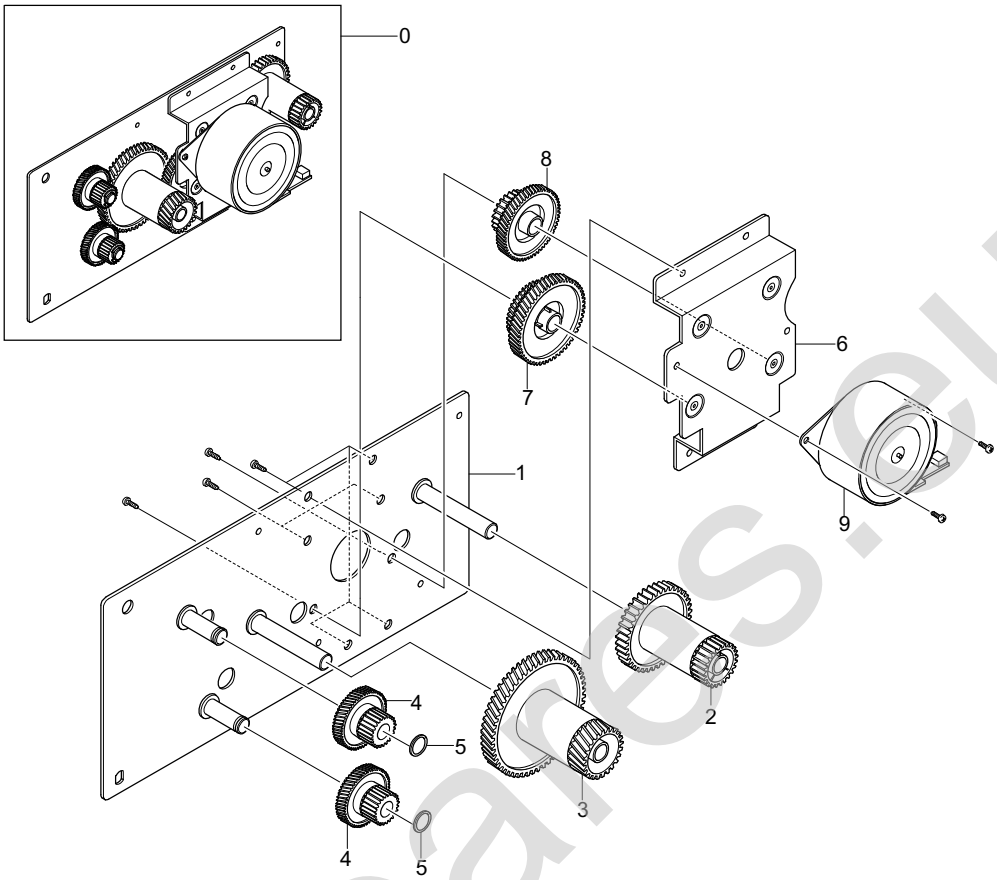

RX Driver Unit Assembly Parts List

SA : Service Available
O : Service available X : Service not available

No.	Description	SEC.Code	Q'ty	SA	Remark
0	ELA UNIT-RX DRIVE	JC96-03078A	1	O	
1	BRACKET-GEAR MAIN	JC61-00891A	1	X	
2	GEAR-RDCN 53/26	JC66-00388A	1	X	
3	GEAR-RDCN 113/33	JC66-00706A	1	X	
4	GEAR-RDCN 57/18	JC66-00389A	2	X	
5	WASHER-PLAIN	6031-000023	2	X	
6	BRACKET-MOTOR MAIN R2	JC61-00916A	1	X	
7	GEAR-RDCN 103/41	JC66-00390A	1	X	
8	GEAR-RDCN 90/31	JC66-00392A	1	X	
9	MOTOR STEP-HUMMINGBIRD	JC31-00037A	1	O	

ITSpares.eu

8.6 Cassette Unit Assembly

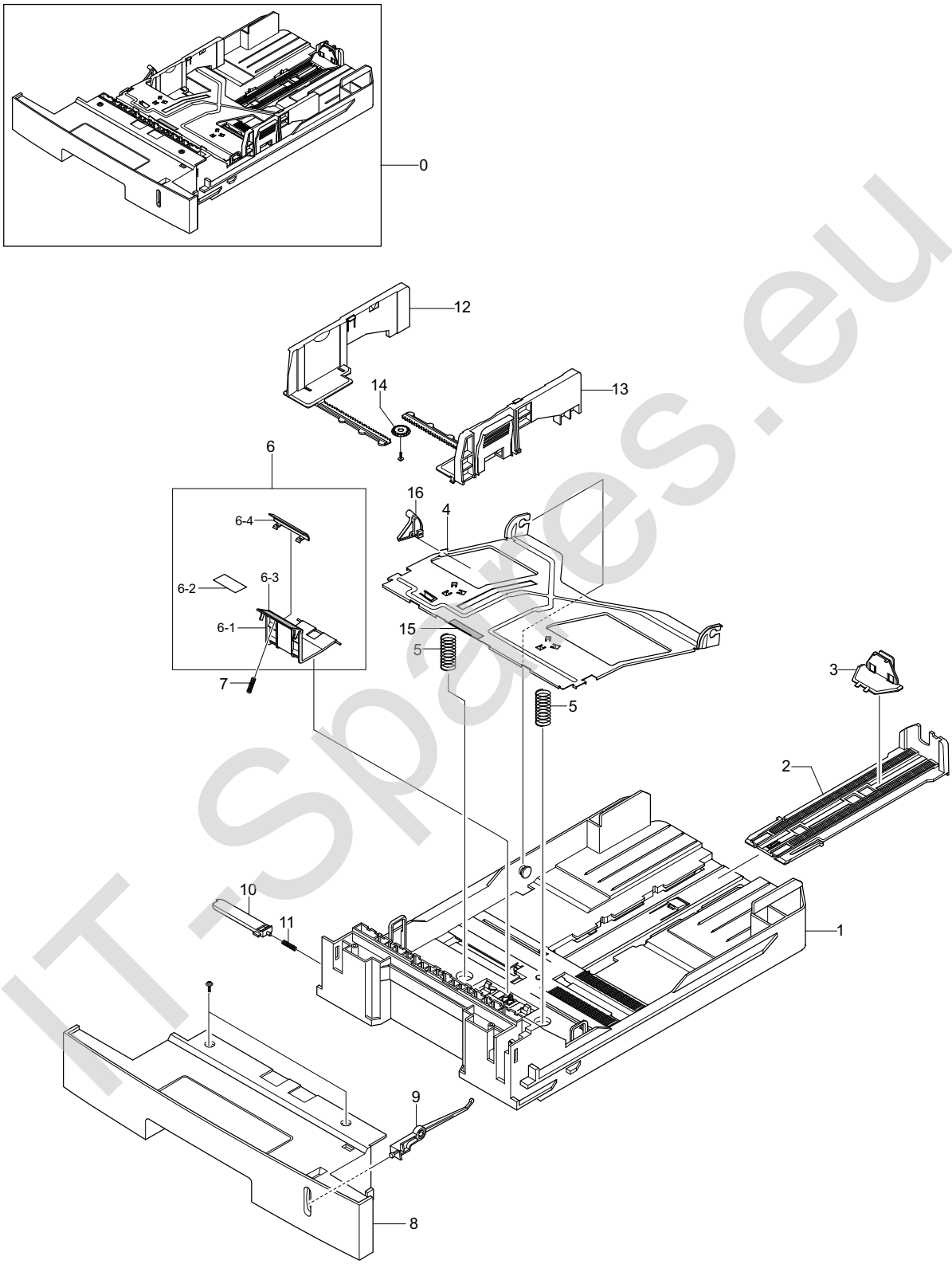

IT-Spares.eu

Casstte Unit Assembly Parts List

SA : Service Available
O : Service available X : Service not available

No.	Description	SEC.Code	Q'ty	SA	Remark
0	MEA UNIT-CASSETTE, USA	JC97-01955A	1	O	
1	FRAME-M-CASSETTE	JC61-00876A	1	X	
2	GUIDE-M-EXTENSION LARGE	JC61-00918B	1	X	
3	GUIDE-EXTENSION SMALL	SC72-00971A	1	X	
4	PLATE-P-KNOCK_UP	JC61-00603A	1	X	
5	SPRING-CS	6107-001166	2	X	
6	MEA UNIT-HOLDER PAD	JC97-01931A	1	O	
6-1	HOLDER-M-PAD	JC61-00580A	1	X	
6-2	SHEET-HOLDER PAD R2	JC63-00407A	1	X	
6-3	RPR-FRICTION PAD	JC73-00140A	1	X	
6-4	IPR-PLATE PAD	JC70-00314A	1	X	
7	SPRING ETC-EXIT ROLL FD	JC61-70911A	1	X	
8	COVER-SUB CASSETTE R2	SC63-00441A	1	X	
9	INDICATOR-M-CST PAPER	JC64-00143A	1	X	
10	PMO-PLATE_LOCKER	JC72-00972A	1	X	
11	SPRING ETC-LOCKER,PLATE	JG61-70531A	1	X	
12	ADJUST-M-CASSETTE_L	JC70-00300A	1	X	
13	ADJUST-M-CASSETTE_R	JC70-00301A	1	X	
14	GEAR-PINION	JG66-40003A	1	X	
15	RPR-PAD CASSETTE	JC73-00141A	1	X	
16	CAM-KNOCK UP	JC66-00719A	1	X	

IT-Spares.eu

8.7 SCF(Option Cassette Unit) Assembly

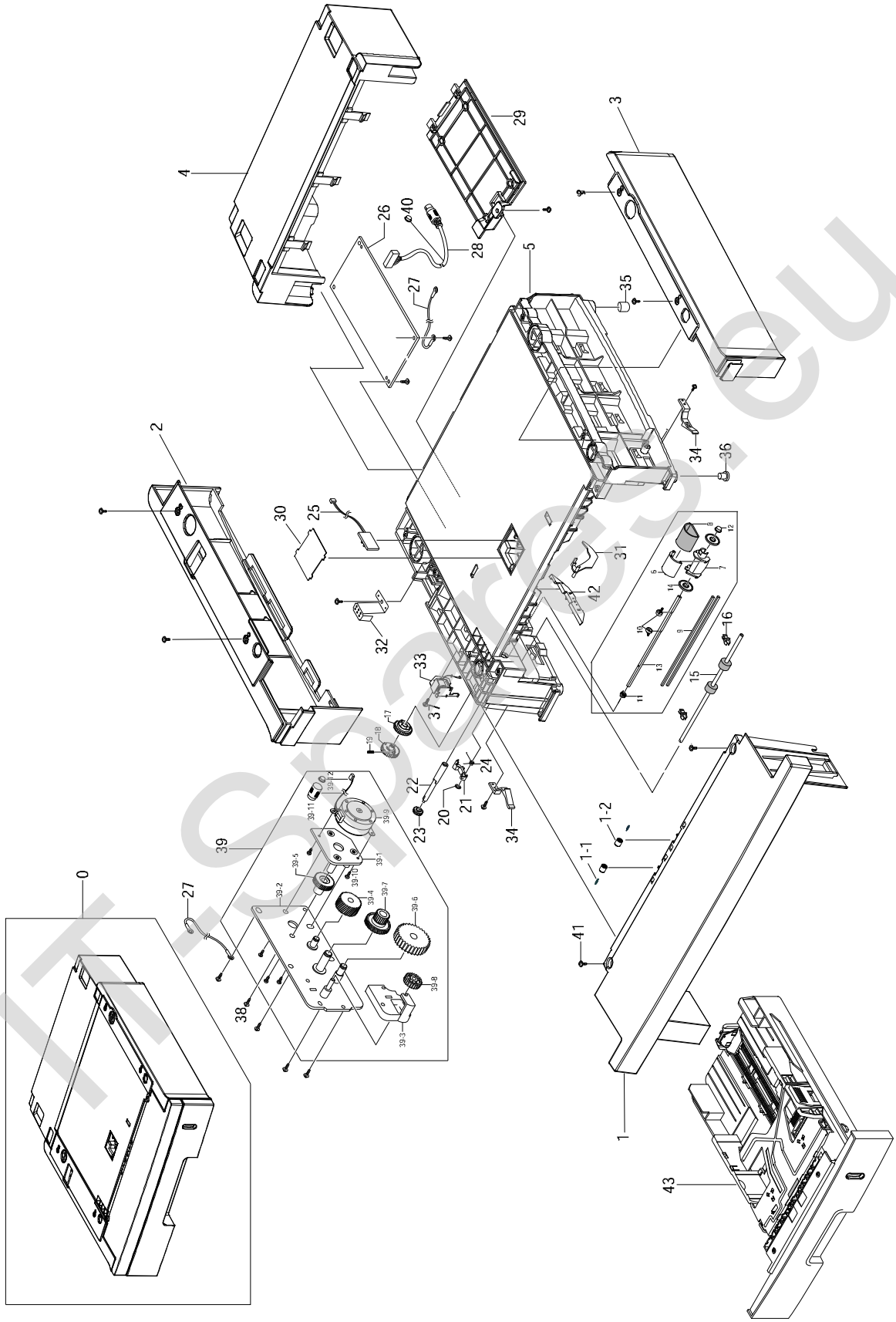

IT-Spares.eu

SCF(Option Cassette Unit) Assembly Parts List

SA : Service Available
O : Service available X : Service not available

No.	Description	SEC.Code	Q'ty	SA	Remark
0	ELA HOU-SCF H2	JC96-03131A	1	O	
1	COVER-M-FRONT SCF H2	JC63-00466A	1	X	
1-1	SPRING-ES	6107-001047	2	X	
1-2	ROLLER-IDLE FEED	JC66-00529A	2	X	
2	COVER-M-LEFT SCF H2	JC63-00467A	1	X	
3	COVER-M-RIGHT SCF H2	JC63-00468A	1	X	
4	COVER-M-REAR SCF H2	JC63-00469A	1	X	
5	FRAME-M-SCF	JC61-00877A	1	X	
6	HOUSING-M-PICKUP _R2	JC61-00909A	1	O	
7	HOUSING-M-PICKUP2 _R2	JC61-00910A	1	O	
8	SPONGE-ROLLER PICK_UP	JC72-01231A	1	O	
9	SHAFT-P-CORE	JC66-00720A	2	X	
10	STOPPER-M-PICK_UP_R2	JC61-00915A	2	X	
11	BUSHING-PICK_UP L	JC61-00586A	1	X	
12	BUSHING-PICK_UP R	JC61-00587A	1	X	
13	SHAFT-P-PICK_UP	JC66-00399A	1	X	
14	PMO-IDLE PICK_UP	JC72-00982A	2	X	
15	ROLLER-FEED	JC66-00598A	1	X	
16	PMO-BUSHING FEED	JC72-00382B	2	X	
17	PMO-GEAR PICK_UP A	JC72-00979A	1	X	
18	PMO-GEAR PICK_UP B	JC72-00980A	1	X	
19	SPRING-CS	6107-001167	1	X	
20	RING-CS	6044-000001	1	X	
21	CAM-M-PICK_UP	JC66-00377A	1	X	
22	SHAFT-FEED	JC66-00398A	1	X	
23	GEAR-FEED 2	JC66-00394A	1	X	
24	SPRING-TS	6107-001170	1	X	
25	PCB-SENSOR	JC92-01364B	1	X	
26	PBASUB-SCF	JC92-01614A	1	X	
27	CBF HARNESS-SCF GND	JC39-00366A	2	X	
28	CBF HARNESS-SCF	JC39-00357A	1	X	
29	COVER-M-SIMM R2	JC63-00492A	1	X	
30	SHEET-COVER SENSOR	JC63-00369A	1	X	
31	PMO-ACTUATOR EMPTY	JC72-00975A	1	X	
32	IPR-GND TOP	JC70-11028A	1	X	
33	SOLENOID-HB (MANUAL)	JC33-00010A	1	X	
34	PMO-LOCKER CST	JC72-00983A	2	X	
35	FOOT-BACK	JC61-00835A	2	X	

ITSpares.eu

SCF(Option Cassette Unit) Assembly Parts List

SA : Service Available
O : Service available X : Service not available

No.	Description	SEC.Code	Q'ty	SA	Remark
36	FOOT-FRONT	JC61-00836A	2	X	
37	SCREW-ASS'Y TAPT	6006-001078	1	X	
38	SCREW-TAPTITE	6003-000196	4	X	
39	ELAHOU-MOTOR SCF	JC96-03003A	1	X	
39-1	BRKT-P-MOTOR SCF	JC6100879A	1	X	
39-2	BRKT-P-GEAR SCF	JC61-00881A	1	X	
39-3	BRKT-M-FEED SCF	JC61-00878A	1	X	
39-4	GEAR 61/47 IDLE	JC66-00688A	1	X	
39-5	GEAR 59 IDLE	JC66-00689A	1	X	
39-6	GEAR 35 IDLE	JC66-00690A	1	X	
39-7	GEAR-RDCN 57/18	JC66-00389A	1	X	
39-8	GEAR-IDLE 23	JC66-00396A	1	X	
39-9	MOTOR STEP(SCF)	JC31-00009A	1	X	
39-10	SCREW-MACHINE	6001-000131	5	X	
39-11	CORE-FERRITE	3301-001635	1	X	
39-12	CABLE TIE	6501-000004	1	X	
40	BUSH CABLE	JC61-00804A	1	X	
41	SCREW-TAPTITE	6003-000196	14	X	
42	GUIDE-M-KNOCKUP	JC61-00937A	1	X	
43	MEA UNIT-CASSETTE	JC97-01955A	1	X	
44	CBF HARNESS-DRIVER GND	JB39-00065A	1	X	
45	MEC-BRUSH ANTISTATIC	JC75-00095A	0.25	X	

IT-Spares.eu

Memo

IT-Spares.eu